3 601 H60 380

Stand ~~08-10~~
Issue 08-12-05

Fig./Abb. 1

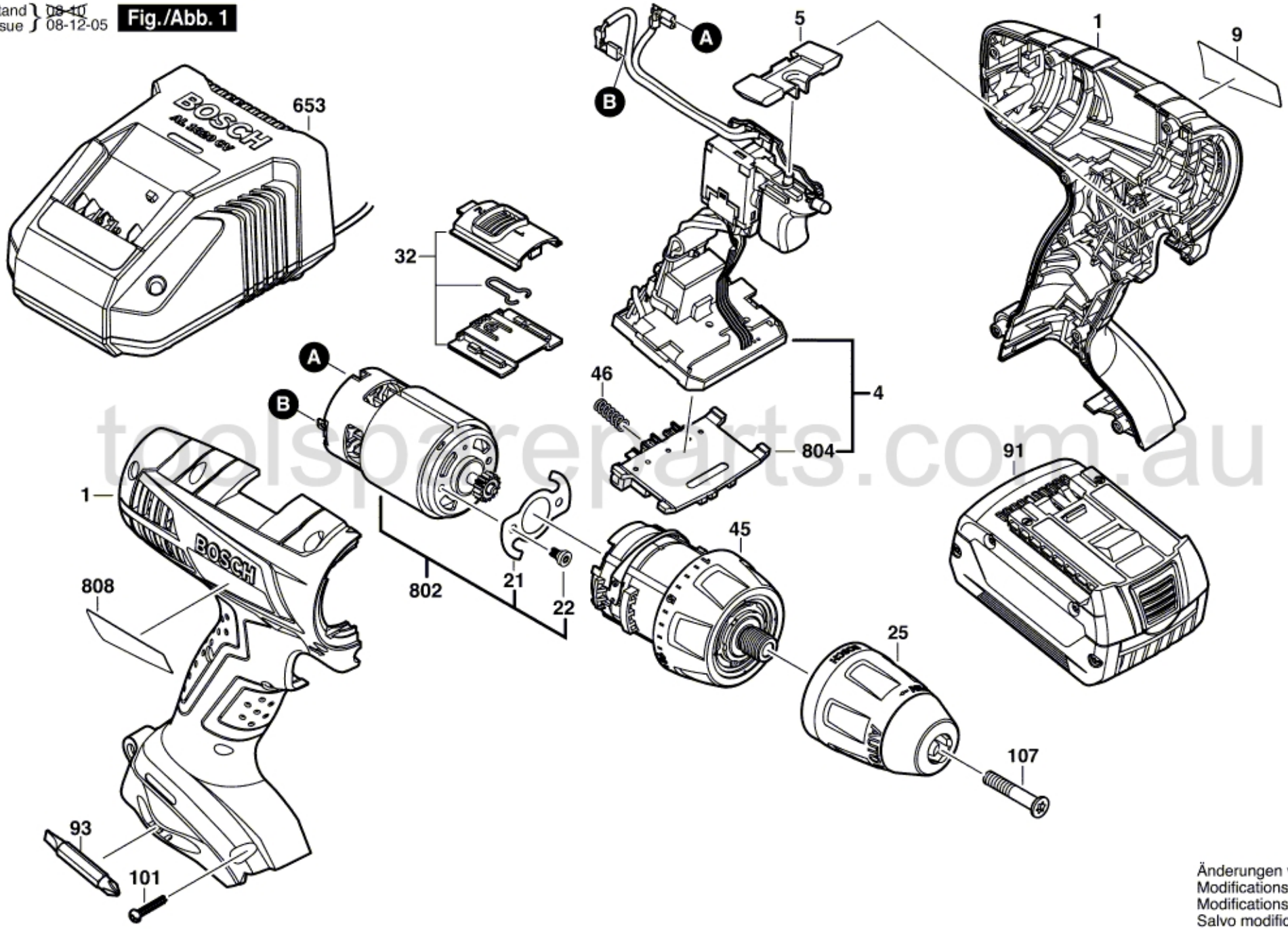

toolspareparts.com.au

Änderungen vorbehalten
Modifications reserved
Modifications reservees
Salvo modificaciones